Operation Manual

EE23

Humidity/Temperature Sensor

YOUR PARTNER IN SENSOR TECHNOLOGY

E+E ELEKTRONIK® Ges.m.b.H.

BA_EE23_B2_e // v1.0 // technical data are subject to change // 194768

E+E Elektronik Ges.m.b.H. doesn’t accept warranty and liability claims neither upon this publication nor in case of improper treatment of the described products.

The document may contain technical inaccuracies and typographical errors. The content will be revised on a regular basis. These changes will be implemented in later versions. The described products can be improved and changed at any time without prior notice.

© Copyright E+E Elektronik Ges.m.b.H.
All rights reserved.

EMC note USA (FCC):

This equipment has been tested and found to comply with the limits for a Class A digital device, pursuant to part 15 of the FCC Rules. These limits are designed to provide reasonable protection against harmful interference when the equipment is operated in a commercial environment. This equipment generates, uses, and can radiate radio frequency energy and, if not installed and used in accordance with the instruction manual, may cause harmful interference to radio communications. Operation of this equipment in a residential area is likely to cause harmful interference in which case the user will be required to correct the interference at his own expense.

EMC note Canada (ICES-003):

CAN ICES-3 (A) / NMB-3 (A)

CONTENT

1 General 4
- 1.1 Explanation of Symbols 4
- 1.2 Safety Instructions 4
  - 1.2.1 General Safety Instructions 4
  - 1.2.2 Safety Instructions for the Alarm Output Module with Voltage >50V 4
  - 1.2.3 Safety Instructions for the Integrated Power Supply (Option AM3) 4
- 1.3 Environmental Aspects 5

2 Scope of Supply 5

3 Operating Components 6
- 3.1 Electronics Board for Model T1, T2, T4 and T6 6
- 3.2 Display for Model T1, T2, T4 and T6 7
- 3.3 Electronic Board for Model T5 8
- 3.4 Display for Model T5 9

4 Intallation 10
- 4.1 Mounting the Enclosure 10
- 4.2 Mounting the Sensing Probe 11
- 4.3 Electrical Connection 12
- 4.4 Connection Versions 12

5 Calibration / Adjustment 14
- 5.1 Definitions 14
- 5.2 Adjustment of EE23 Model T1, T2, T4 and T6 via Push Buttons on the Electronics Board 14
  - 5.2.1 2-Point RH Adjustment Procedure / T Adjustment Procedure 14
  - 5.2.2 1-Point RH Adjustment Procedure / T Adjustment Procedure 15
  - 5.2.3 Return to Factory Calibration 15
- 5.3 Adjustment of the EE23 Model T5 via the USB Service Interface 16

6 Maintenance 16

7 Troubleshooting 16
- 7.1 Fuse Replacement for Option AM3 16

8 Accessories and Spare Parts 17

9 Technical Data 18
- 9.1 Operating Range Humidity Sensor 19

1 General

This operation manual is part of the scope of supply and serves for ensuring proper handling and optimal functioning of the device.
The operation manual shall be read before commissioning the equipment and it shall be provided to all staff involved in transport, installation, operation, maintenance and repair.

The operation manual may not be used for the purposes of competition without the written consent of E+E Elektronik® and may not be forwarded to third parties. Copies may be made for internal purposes. All information, technical data and diagrams included in these instructions are based on the information available at the time of writing.

1.1 Explanation of Symbols

This symbol indicates safety information.
It is essential that all safety information is strictly observed. Failure to comply with this information can lead to personal injuries or damage to property. E+E Elektronik® assumes no liability if this happens.

This symbol indicates instructions.
The instructions shall be observed in order to reach optimal performance of the device.

1.2 Safety Instructions

1.2.1 General Safety Instructions

- Avoid any unnecessary mechanical stress and inappropriate use.
- Replace the filter cap with utmost care, so that the filter cap does not touch the sensing elements of the sensing head at any time.
- Do never touch the sensing elements.
- For sensor cleaning and filter cap replacement please see “Cleaning instructions” at www.epluse.com.
- Installation, electrical connection, maintenance and commissioning shall be performed by qualified personnel only.

1.2.2 Safety Instructions for the Alarm Output Module with Voltage >50V

(not available for model T5 with remote probe up to 180 °C (356 °F))

- The alarm output module must be separated from the screw terminals by the partition plate (see picture).
- The enclosure must be properly closed before power on.
- Power off the device before opening the enclosure.

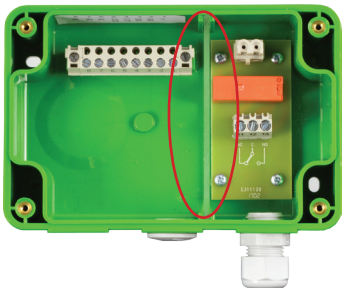

1.2.3 Safety Instructions for the Integrated Power Supply (Option AM3)

- The back cover and the middle (active) part of the EE23 with metal enclosure must be grounded during operation.
- The E23 enclosure must be properly closed before power on.
- Power off the device before opening the enclosure.

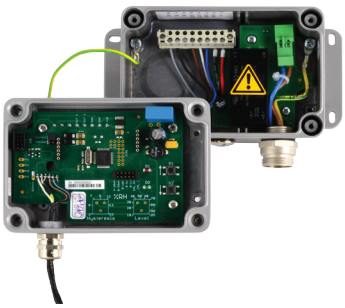

1.3 Environmental Aspects

Products from E+E Elektronik® are developed and manufactured observing of all relevant requirements with respect to environment protection. Please observe local regulations for the device disposal.

For disposal, the individual components of the device must be separated according to local recycling regulations. The electronics shall be disposed of correctly as electronics waste.

2 Scope of Supply

	Included in all versions	According to ordering guide
EE23 according to ordering guide	x	
Operation manual in English	x	
Inspection certificate according to DIN EN 10204 – 3.1	x	
Allen key 3.0		only for metal enclosure
Mating cable connector for integrated power supply		AM3
Mating cable connector RSC 5/7		AM3 / E4
M16 cable gland	except AM3, E4	

3 Operating Components

3.1 Electronics Board for Model T1, T2, T4 and T6

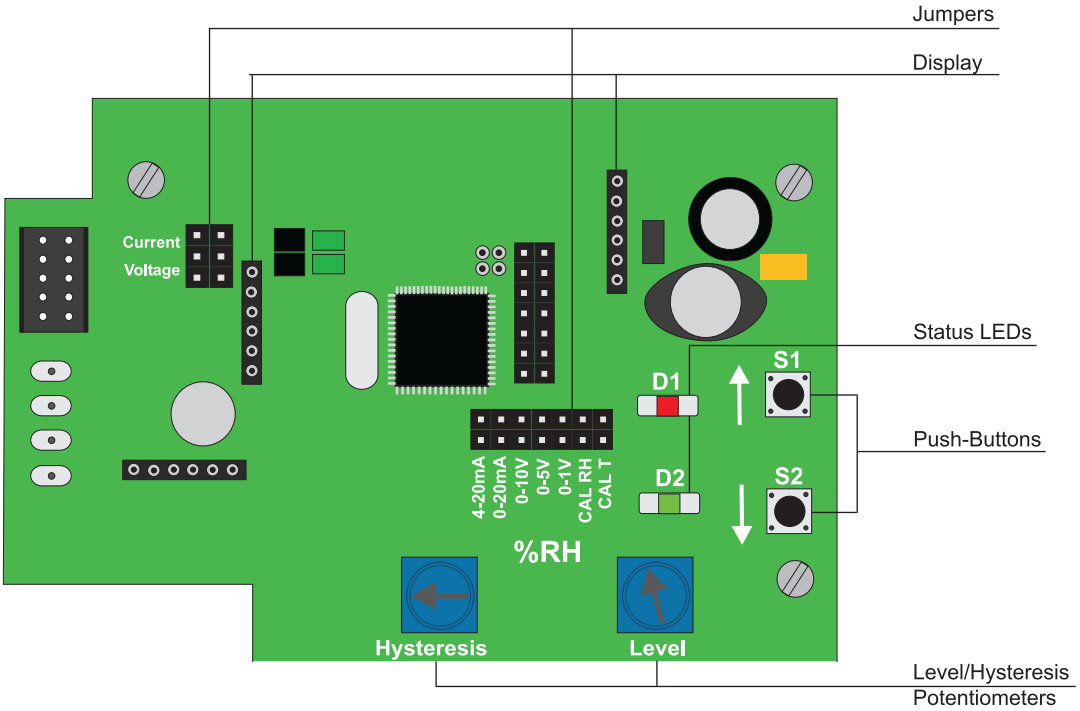

Fig. 1 Electronics board model T1, T2, T4 and T6

1. Jumpers:
Selection of the output signal and output range

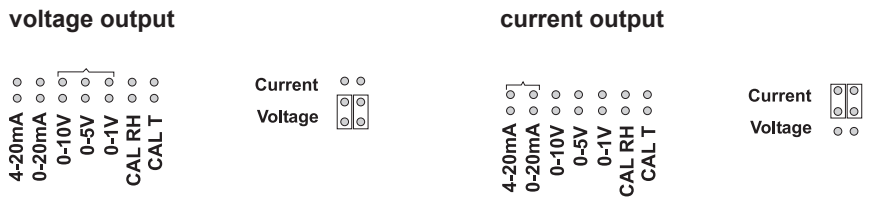

2. Display:
Connectors for the optional display

3. Status LEDs

D1 (red) - continuously on during the calibration routine
- one short flash confirms reset to factory calibration

D2 (green) - flashes during normal operation
- continuously on indicates sensor damage

4. Push-Buttons
The S1 and S2 push buttons are used for the EE23 adjustment as well as for returning to the factory calibration (see Calibration / Adjustment).

5. Level / Hysteresis
Potentiometers for setting the threshold / hysteresis (available with alarm module only)

3.2 Display for Model T1, T2, T4 and T6

The display is plugged into the connectors on the electronics board and it can easily be replaced. For upgrading an EE23 originally without display please see “Replacement parts / accessories”.

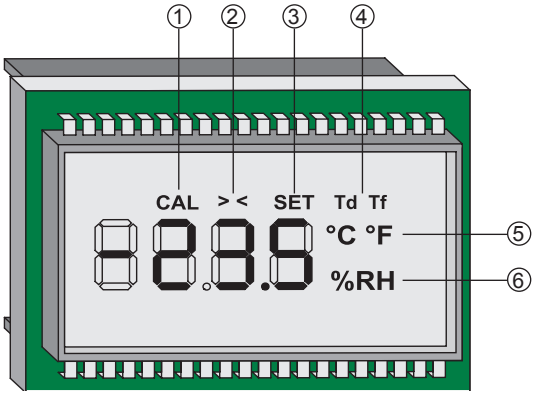

Fig. 2 Display description T1, T2, T4 and T6

1. CAL
Indicates that the device in calibration/adjustment mode

2. > <
>: indicates measured value above the alarm threshold (with alarm module only).
visual feedback when depressing the S1 push button (Fig. 1)

<: indicates measured value below the alarm threshold (with alarm module only).
visual feedback when depressing the S2 push button (Fig. 1)

3. SET
Indication for EE23 with optional alarm output

4. Td / Tf
Dew point temperature / frost point temperature

5. °C / °F
Unit for temperature (T) and dew point temperature (Td) and frost point temperature (Tf)

6. %RH
Unit for relative humidity (RH)

3.3 Electronic Board for Model T5

T5 = remote probe up to 180 °C (356 °F)

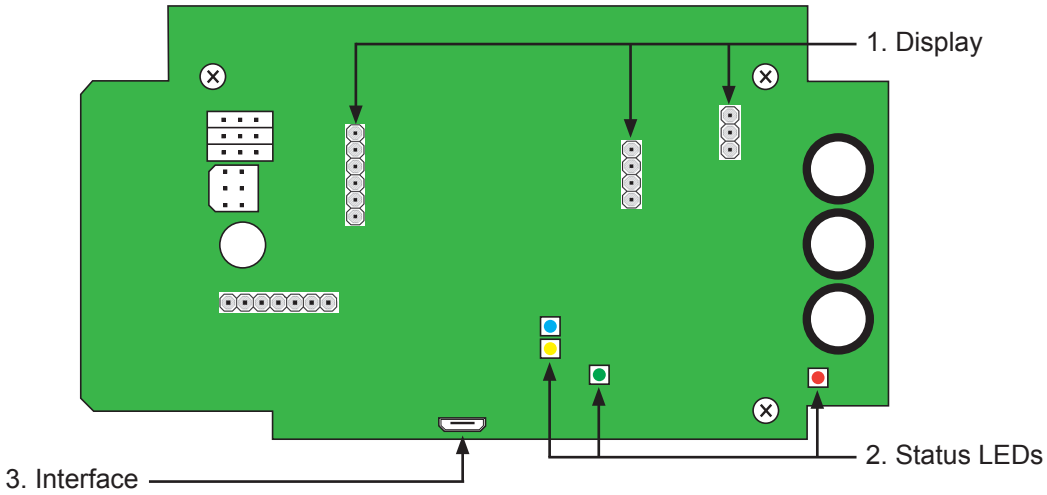

Fig. 3 Electronics board model T5

1. Display:
Connectors for the optional display

2. Status LEDs:
Green LED
flashing --> Supply voltage applied / Microprocessor is active

Red LED
constantly lit --> Error category 1 = non-critical error, can be solved by the user
flashing --> Error category 2 = critical error, return the device for service

Blue LED
constantly lit --> analogue output is set to voltage.

Orange LED
constantly lit --> analogue output is set to current.

3. Interface:
USB-Interface for service use

3.4 Display for Model T5

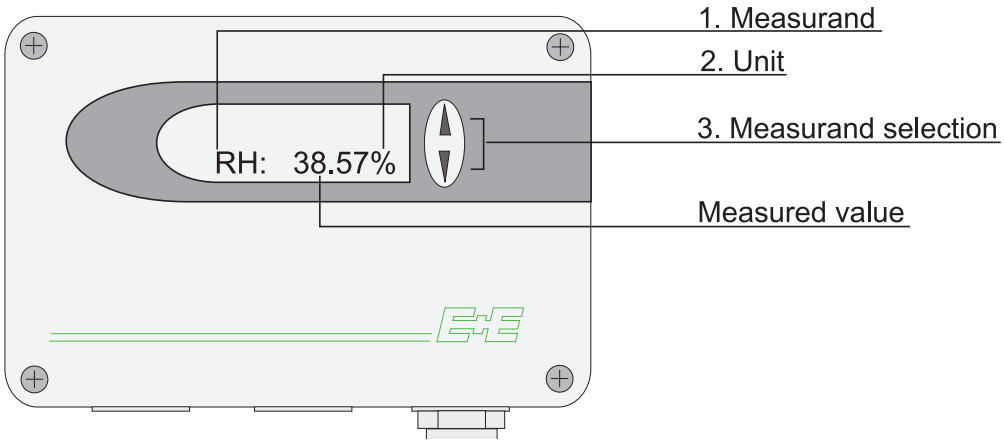

Fig. 4 Display description T5

1. Measurand		2. Units		3. Mesurand selection
		SI	**US**	
RH	Relative humidity	%	%	Press the ∆ or ∇ button to select the measurand to be displayed.
T	Temperature	°C	°F	
h	Enthalpy	kJ/kg	ftlbf/lb	
r	Mixture ratio	g/kg	gr/lb	
dv	Absolute humidity	g/m³	gr/ft	
Tw	Wet-bulb temperature	°C	°F	
Td	Dew-point temperature	°C	°F	
e	Water vapour partial pressure	mbar	psi	

Tab. 1 Mesurand selection

Error description	Error code (display)	Error category	Recommended action
Short circuit - on voltage output 1[1)]	ERROR: 01	1	Check wiring of outputs
Short circuit - on voltage output 2[1)]			
Short circuit - on both voltage outputs*			
Current loop open - output 1	ERROR: 02		Check wiring of outputs
Current loop open - output 2			
Current loop open - both outputs			
RH sensor dirty	ERROR: 03		Clean the sensor[2)]
Hardware error	ERROR: 05	2	Return the faulty unit for service
	ERROR: 06		
	ERROR: 08		
Temperature measurement failure	ERROR: 07		
Humidity measurement failure	ERROR: 09		
	ERROR: 10		

1) not available with 0 - 1 V output
2) see “Cleaning Instructions” at www.epluse.com/ee23

Tab. 2 Description of error messages on the display

4 Intallation

4.1 Mounting the Enclosure

1. Only for model T2 (duct mounting). Drill the hole for inserting the probe into the duct wall,Fig. 7 on page 11. The relevant position of top left mounting screw of the back cover with respect to the probe center:

Metal enclosure:	x = 28.5mm (1.1”)	y = 37.5mm (1.5”)
Polycarbonate enclosure:	x = 20.5mm (0.8”)	y = 25.4mm (1”)

2. Fix the back cover of EE23 onto the wall / panel using 4 screws (diameter max. 4.2mm (0.2”) ; not included in the scope of supply).

The device shall be mounted with the cable glands pointing downwards or horizontal.

3. Wire the terminals inside the back cover according to „Fig. 10 Connection diagram“ on Page 12.

4. Insert the middle (active) part into the back cover. By this the connection pins of the middle part will plug into the terminals of the back cover and thus realize the electrical connection.

5. Place the front cover onto the middle part and close tight the enclosure using the four screws included in the scope of supply.

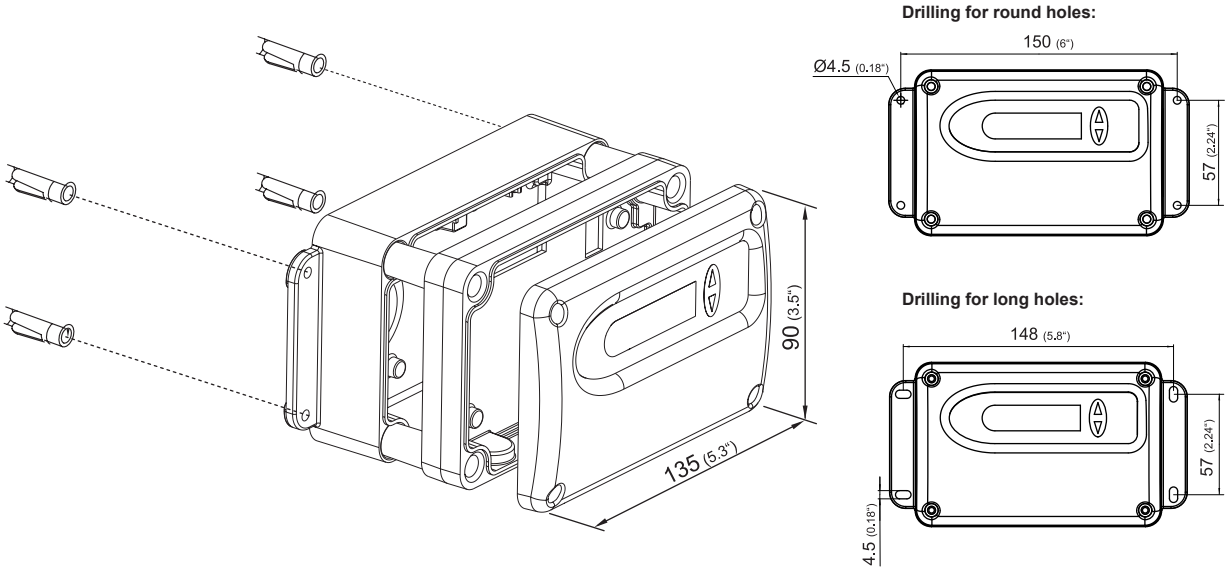

Fig. 5 Mounting of metal enclosure

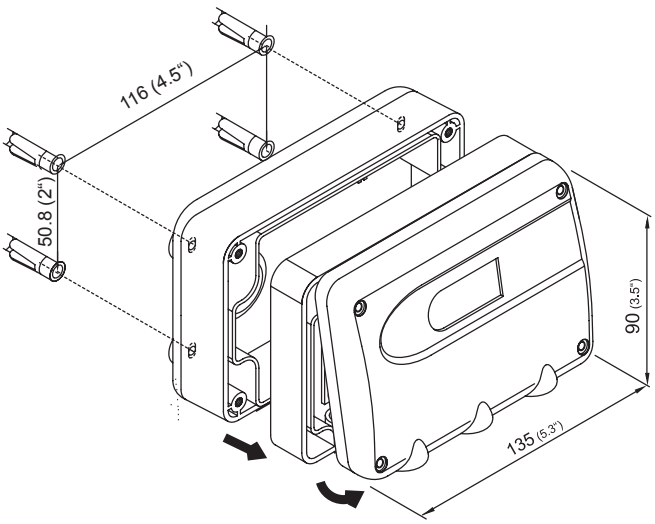

Fig. 6 Mounting of polycarbonat enclosure

For the wall mount model the probe must point downwards.
For the duct mount model the probe must point either horizontally or downwards.

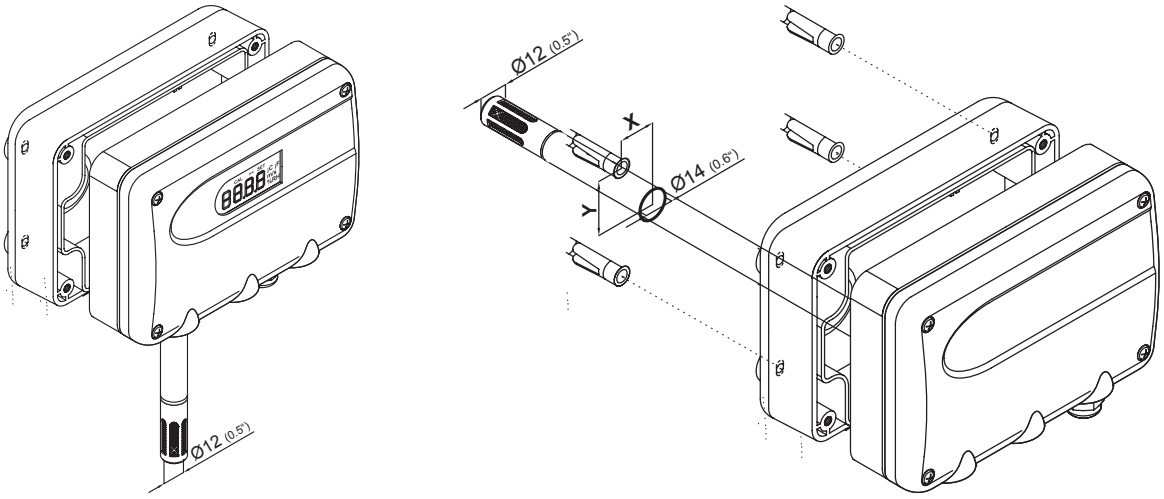

Fig. 7 T1 Wall mount T2 Duct mount

Mounting onto DIN rails
EE23 with polycarbonate enclosure can be mounted also on DIN rails with the bracket HA010203 (not included in the scope of supply, see “spare parts / accessories”).

4.2 Mounting the Sensing Probe

Whenever possible place the entire probe inside the space to be monitored.

In case of mounting the probe into a partition wall, it is of paramount importance for accurate measurement to avoid T gradients along the probe. In case of large T difference between the two sides of the wall, it is highly recommended to insert the probe completely (up to the cable outlet) into the wall. Should this not be possible, place a thermal isolation layer on the part of the probe outside the wall (on the cable side).

For probe mounting into a partition wall use the mounting flanges HA010201 for probe diameter 12 mm and HA010208 for probe diameter 5 mm. Neither the mounting flanges nor the EE23 probes are pressure rated and as such they are not appropriate for pressure tight mounting. For pressure tight requirements please see www.epluse.com for appropriate products such as EE310.

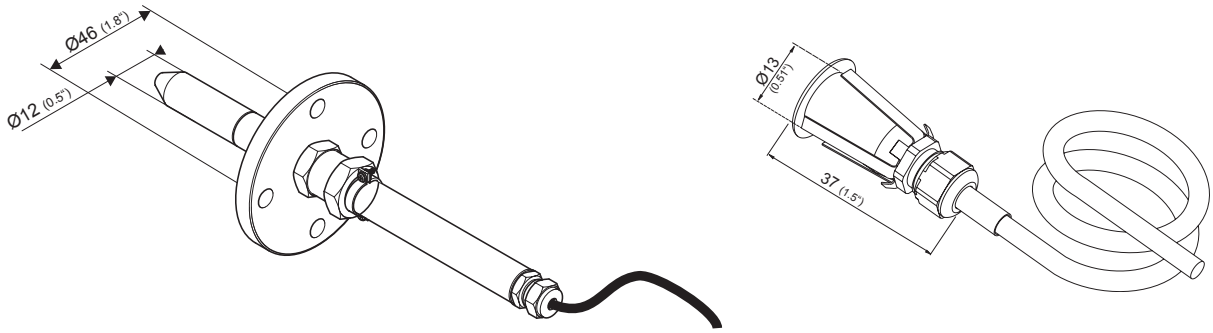

Fig. 8 Mounting flange HA010201 Mounting flange HA010208

For applications where condensation is likely to happen, certain ways of mounting are required.

- For probe hanging onto its cable from the ceiling, use the drip water protection HA010503 (not included in the scope of supply, see “spare parts / accessories”). This protects the probe and the sensing head against water dripping along the cable.
- For horizontal mounted probe, a drip water point should be made just before the probe.

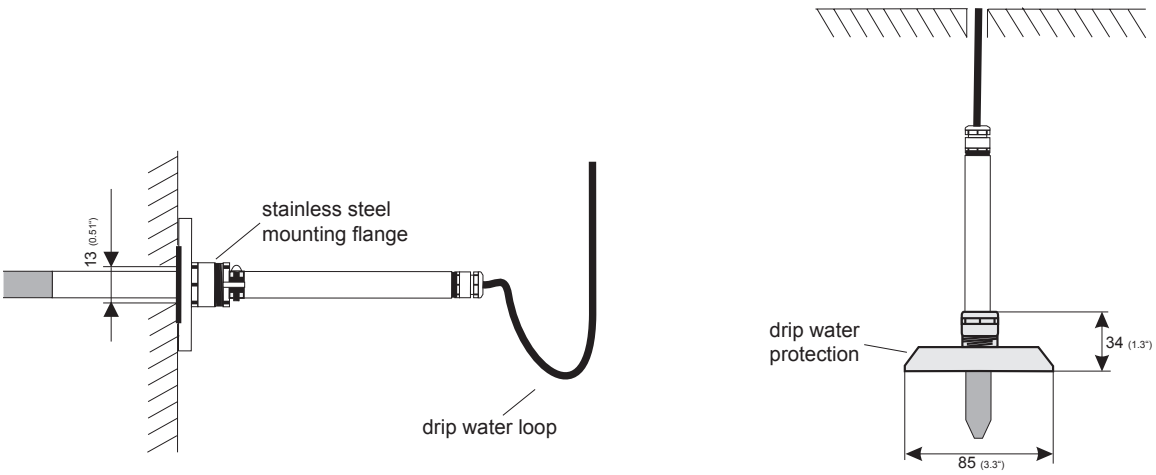

horizontal **hanging onto the probe cable**

Fig. 9 Mounting the sensing probe

4.3 Electrical Connection

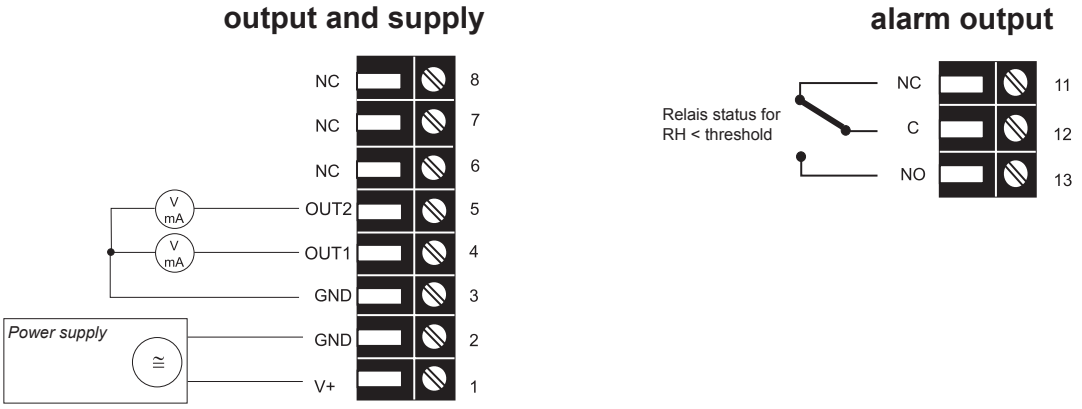

Fig. 10 Connection diagram

4.4 Connection Versions

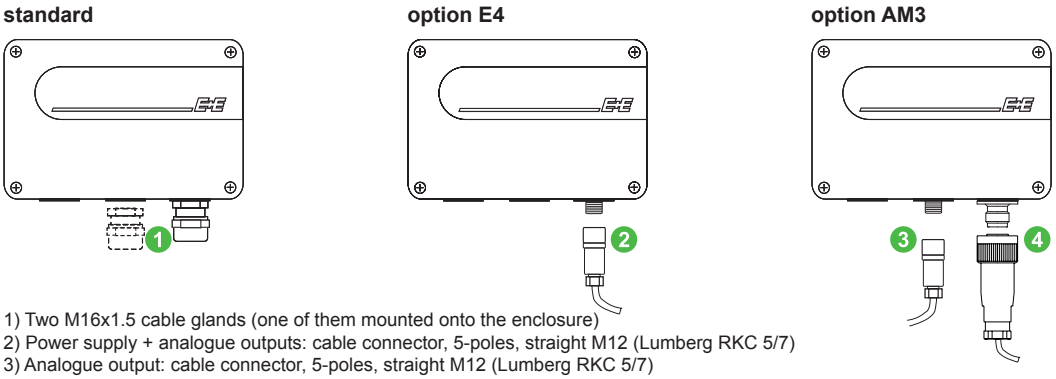

1) Two M16x1.5 cable glands (one of them mounted onto the enclosure)
2) Power supply + analogue outputs: cable connector, 5-poles, straight M12 (Lumberg RKC 5/7)
3) Analogue output: cable connector, 5-poles, straight M12 (Lumberg RKC 5/7)
4) AC power supply: cable connector, 3-poles, straight (7/8"-16UN)

Pin assignment for option E4 (with supply 8...35V DC / 12...30V AC)

plug for supply and analogue output
(front view)

Description:	Pins:
V+	5
GND	4
GND	3
OUT1	2
OUT2	1

Pin assignment for option AM3 (integrated supply unit for 100...240V AC)

plug for analogue outputs
(front view)

Description:	Pins:
GND	3
OUT1	2
OUT1	1

plug for 100-240 V metal enclosure
(front view)

Description:	Pins:
grounding (PE)	1
phase (L1)	2
neutral wire (N)	3

plug for 100-240 V polycarbonate enclosure
(front view)

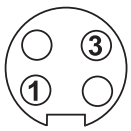

Description:	Pins:
phase (L1)	1
neutral wire (N)	3

External diameter of supply cable: 10-12mm (0.39-0.47”)
Maximum wire cross section for connecting cable: 1.5mm² (AWG 16)

The protection of the supply cable against excess current and short-circuit must be designated to a wire cross section of 0.8mm² (AWG 18) (6A fuse).

The back cover and the middle part of the metal enclosure must be grounded during operation!

5 Calibration / Adjustment

5.1 Definitions

Calibration
The calibration documents the accuracy of a measurement device. The device under test (specimen) is compared with the reference and the deviations are documented in a calibration certificate. During the calibration, the specimen is not changed or improved in any way.

Adjustment
The adjustment improves the measurement accuracy of a device. The specimen is compared with the reference and brought in line with it. An adjustment can be followed by a calibration which documents the accuracy of the adjusted specimen.

i For general calibration / adjustment guidelines and for the choice of humidity reference devices please see “Calibration Instructions” at www.epluse.com/ee23

The 2-point adjustment is recommended for best accuracy over a wide RH and / or T range.

Always start the 2-point adjustment with the lower adjustment point RH_low / T_low, followed by the higher adjustment point RH_high / T_high.

The span between the two adjustment points must be:

|RH_high – RH_low| > 30% RH
|T_high – T_low| > 30 °C (54°F)

The 1-point adjustment should be used only when the RH and/or T range of interest is rather narrow. The RH resp. T adjustment point should be ideally in the middle of the range of interest.

Example:
In a climate controlled environment with 40% < RH < 60% and 15 °C < T < 25 °C (59 °F < T < 77 °F), 1-point adjustment shall be performed at 50 % RH and 20 °C (68 °F).

i 1-point adjustment leads to very good accuracy within the range of main interest at the cost of the accuracy beyond this range.

5.2 Adjustment of EE23 Model T1, T2, T4 and T6 via Push Buttons on the Electronics Board

5.2.1 2-Point RH Adjustment Procedure / T Adjustment Procedure

1. For a RH humidity adjustment set the jumper to CAL RH */ for a temperature adjustment set the jumper to CAL T*.

First point adjustment

2. Allow for the probe to stabilize at RH_low / T_low for min. 30 minutes.

3. Press **BUTTON S2** for min. 3 seconds to start the adjustment procedure for the first point. The LED „D1“ illuminates and „CAL<“ appears on the LC display.

4. Press **BUTTON S1 (up)** and **S2 (down)** to adjust the measured value in steps of 0.1% / 0.1 °C up or down to match the reference value. The change is indicated on the display (if available) or can be measured at the analogue output.

5. Press **BUTTON S1** for min. 3 seconds to store adjusted value and end the first point adjustment.
or

Press **BUTTON S2** for min. 3 seconds to exit adjustment procedure without storing the adjusted value.

In both cases the LED „D1“ and the symbol „CAL<“ on the LC display are deactivated.

Second point adjustment

6. Allow for the probe to stabilize at the desired RH_high / T_high for min. 30 minutes.

7. Press **BUTTON S1** for min. 3 seconds to start the adjustment procedure for the second point. The LED „D1“ illuminates and „CAL>“ appears on the LC display.

8. Press **BUTTON S1 (up)** and **S2 (down)** to adjust the measured value in steps of 0.1% / 0.1 degC up or down to match the reference value. The change is indicated on the display (if available) or can be measured at the analogue output.

9. Press **BUTTON S1** for min. 3 seconds to store adjusted value and end the first point adjustment.
or
Press **BUTTON S2** for min. 3 seconds to exit adjustment procedure without storing the adjusted value.

In both cases the LED „D1“ and the symbol „CAL>“ on the LC display are deactivated.

5.2.2 1-Point RH Adjustment Procedure / T Adjustment Procedure

1. For a RH humidity adjustment set the jumper to CAL RH / *for a temperature adjustment set the jumper to CAL T*.

2. Allow for the probe to stabilize at the desired RH / T for min. 30 minutes.

3. For adjustment point > 50% RH / in the upper half of the T output scale): press **BUTTON S1** for min. 3 seconds to start the procedure. The LED „D1“ illuminates and „CAL<“ appears on the LC display.
or
For adjustment point < 50% RH / in the lower half of the T output scale): press **BUTTON S2** for min. 3 seconds to start the procedure. The LED „D1“ illuminates and „CAL>“ appears on the LC display.

4. Press **BUTTON S1** (up) and S2 (down) to adjust the measured value in steps of 0.1% / *0.1 °C* up or down to match the reference value. The change is indicated on the display (if available) or can be measured at the analogue output.

5. Press **BUTTON S1** for min. 3 seconds to store adjusted value and end the first point adjustment.
or
Press **BUTTON S2** for min. 3 seconds to exit adjustment procedure without storing the adjusted value.

In both cases the LED „D1“ and the symbol „CAL“ on the LC display are deactivated.

5.2.3 Return to Factory Calibration

To return to RH or T factory calibration set first the jumper to RH or to T respectively.

During normal measuring mode (i.e. not during the adjustment procedure. LED D1 shall be off, the display shall not show “CAL”) pressing BUTTON S1 and S2 together for min 5 seconds. The return to factory calibration is confirmed by a short flash of the LED „D1“.

5.3 Adjustment of the EE23 Model T5 via the USB Service Interface

1. Download and install the EE-PCS Product Configuration Software from www.epluse.com/configurator
2. Connect the USB service interface of EE23-T5 to the PC.
3. Start the EE-PCS software.
4. Select the desired adjustment mode and follow the instructions of the EE-PCS.

6 Maintenance

When employed in dusty, polluted environment:

- The filter cap shall be replaced as needed with an E+E original one. A polluted filter cap causes longer response time of the device.
- For cleaning of the sensing head please see “Cleaning Instructions” at www.epluse.com/ee23.

7 Troubleshooting

See status LEDs at „3 Operating Components“ on Page 6 and error messages on the display at „3.4 Display for Model T5“ on Page 9.

7.1 Fuse Replacement for Option AM3

If the green LED on the PCB is not flashing with the supply voltage switched on check the fuse and replace if required.

Fuse secondary: 250mA / T UL248-14

Recommended replacement types:

Series: MSTU 250	Manufacturer: Schurter	Order No.: 0034.7109
Series: 374	Manufacturer: Littelfuse	Order No.: 374 0250

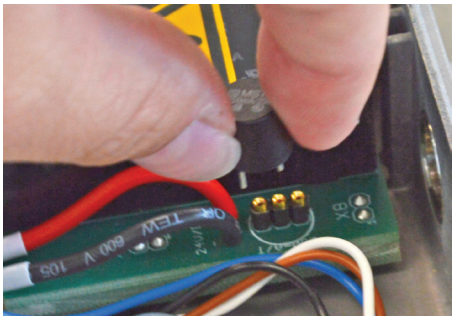

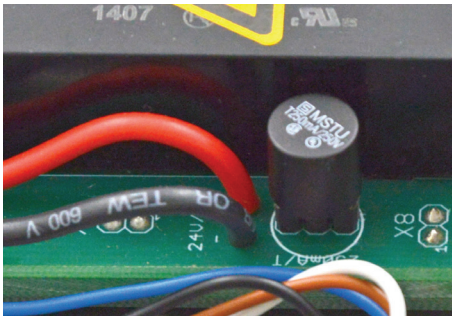

Fig. 11 Fuse replacement

8 Accessories and Spare Parts

Description	Order Code
- Filter caps	HA0101xx
- External power supply unit	V03
- Display + housing cover in metal	
for T1, T2, T4 and T6	D03M-EE23
for T5	D05M-EE23T5
- Display + housing cover in polycarbonate	
for T1, T2, T4 and T6	D03P-EE23
for T5	D05P-EE23T5
- Mounting flange for probe diameter 12 mm	HA010201
- Mounting flange 5mm (for model T6 only)	HA010208
- Bracket for plastic enclosure - for installation onto mounting rails	HA010203
- Drip water protection	HA010503
- Calibration set (see data sheet „Calibration Kit“)	HA0104xx
- Radiation shield	HA010502

9 Technical Data

Measurands

Relative Humidity

Working range		0...100% RH	
Accuracy[1] (including hysteresis, non-linearity and repeatability, traceable to intern. standards, administrated by NIST, PTB, BEV...)			
		EE23-T1/T2/T4/T5	**EE23-T6**
-15...40°C (5...104°F)	≤90% RH	± (1.3 + 0.3%*mv) % RH	± (1.8 + 0,3%*mv) % RH
-15...40°C (5...104°F)	>90% RH	± 2.3% RH	± 2.8% RH
-25...70°C (-13...158°F)		± (1.4 + 1%*mv) % RH	± (1.9 + 1%*mv) % RH
-40...180°C (-40...356°F)		± (1.5 + 1.5%*mv) % RH	-
Temperature dependence electronics		typ. ± 0.015% RH/°C	
Response time t_{90} with metal grid filter at 20 °C (68 °F)		< 15 sec.	

Temperature

Probe working range	EE23-T1	-40...60°C	(-40...140°F)
	EE23-T2/T6	-40...80°C	(-40...176°F)
	EE23-T4	-40...120°C	(-40...248°F)
	EE23-T5	-40...180°C	(-40...356°F)

Accuracy

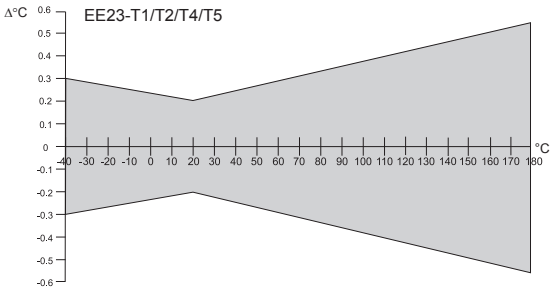

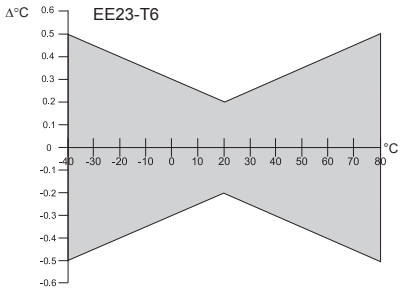

Temperature dependence of electronics	typ. 0.002°C/°C

Output Scale Span

		from	up to				units
			EE23-T1	**EE23-T2/T6**	**EE23-T4**	**EE23-T5**	
Humidity	RH	0	100	100	100	100	% RH
Temperature	T	-40 (-40)	60 (140)	80 (176)	120 (248)	180 (356)	°C (°F)
Dew point temperature	Td	-40 (-40)	60 (140)	80 (176)	100 (212)	100 (212)	°C (°F)
Frost point temperature	Tf	-40 (-40)	0 (32)	0 (32)	0 (32)	0 (32)	°C (°F)

Outputs

0 - 1 V	-0.5 mA < I_L < 0.5 mA
0 - 5 / 0 - 10 V	-1 mA < I_L < 1 mA
0 - 20mA / 4 - 20 mA	R_L < 470 Ohm

General

Supply voltage	
for 0 -1 V / 0 - 5 V outputs	10.5 - 35V DC or 12 - 28V AC
for 0 - 10 V / 0 - 20 mA / 4-20 mA outputs	15.0 - 35V DC or 15 - 28V AC
	100...240V AC, 50/60Hz supply module (optional)
Current consumption for voltage output	
for DC supply	≤ 25 mA (with alarm module ≤ 35 mA)
for AC supply	≤ 45 mA_{eff} (with alarm module ≤ 70 mA_{eff})
Current consumption for current output	
for DC supply	≤ 55 mA (with alarm module ≤ 65 mA)
for AC supply	≤ 100 mA_{eff} (with alarm module ≤ 120 mA_{eff})
Enclosure / protection class	PC or Al Si 9 Cu 3 / IP65; NEMA 4
Cable gland	M16x1.5 cable Ø 4.5 - 10 mm (0.18 - 0.39”)
Electrical connection	screw terminals max. 1.5 mm² (AWG 16)
Working temperature range of electronics	-40...60°C (-40...140°F)
Working temperature range with display	-30...60°C (-22...140°F)
Storage temperature range	-40...60°C (-40...140°F)
CE compatibility according	EN61326-1 EN61326-2-3 ICES-003 ClassB
	Industrial Environment FCC Part15 ClassB

Alarm Module[2)]

Output	SPDT-Switch max. 250V AC/8A or 28V DC/8A	
	threshold	hysteresis
Setting range	10...95% RH	3...15% RH
Setting accuracy	± 3% RH	

1) The accuracy statement includes the uncertainty of the factory calibration with an enhancement factor k=2 (2-times standard deviation). The accuracy was calculated in accordance with EA-4/02 and with regard to GUM (Guide to the Expression of Uncertainty in Measurement).
2) only for models T1, T2, T4 and T6.

9.1 Operating Range Humidity Sensor

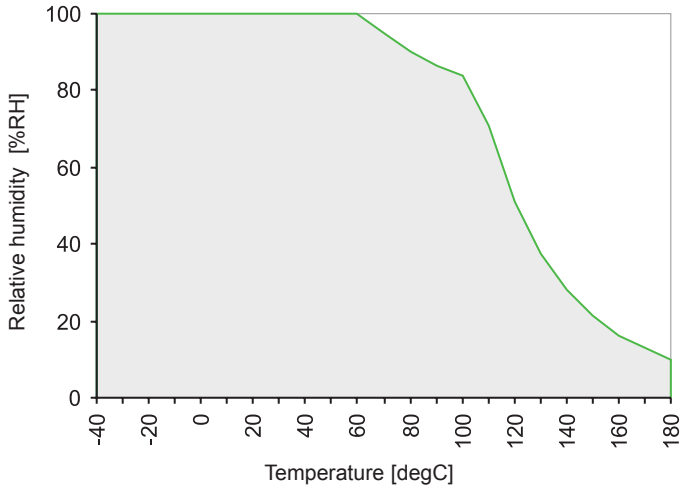

The gray area shows the allowed measurement range for the humidity sensor.
Operation beyond this range does not destroy the sensing element, but the specified measurement accuracy cannot be guaranteed.

HEADQUARTERS

E+E Elektronik Ges.m.b.H.
Langwiesen 7
A-4209 Engerwitzdorf
Austria
Tel: +43 7235 605 0
Fax: +43 7235 605 8
info@epluse.com
www.epluse.com

SUBSIDIARIES

E+E Elektronik Germany
info@epluse.de

Office Bad Homburg
Tel: +49 6172 13881-0

Office Hamburg
Tel: +49 160 9050 6460

Office Stuttgart
Tel: +49 151 538 37 500

E+E Elektronik Italy
info@epluse.it
Tel: +39 02 2707 86 36

E+E Elektronik France
info@epluse.fr
Tel: +33 4 74 72 35 82

E+E Elektronik USA
office@epluse.com

Office Boston
Tel: +1 508 530 3068

Office Chicago
Tel: +1 847 490 7813

E+E Elektronik Korea
Tel: +82 31 732 6050
info@epluse.co.kr

E+E Elektronik China
info@epluse.cn

Office Beijing
Tel: +86 10 8499 2361

Office Shanghai
Tel: +86 21 6117 6129

Office Guangzhou
Tel: +86 20 3898 7052

YOUR PARTNER IN SENSOR TECHNOLOGY

E+E ELEKTRONIK® Ges.m.b.H.